GMB POWER®

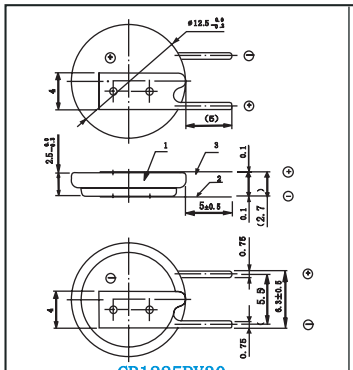
CR1225PV30

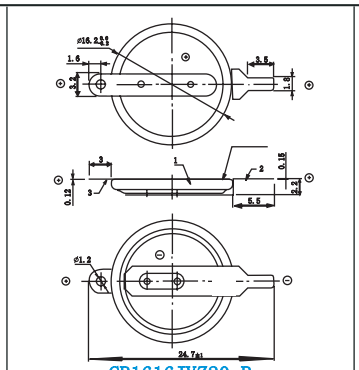
CR1616JVZ20-B

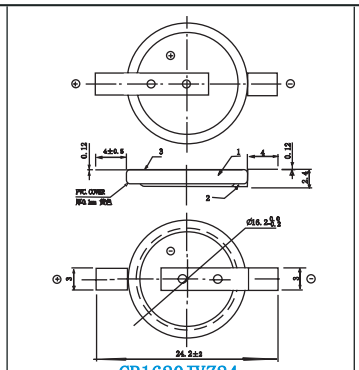
CR1620JVZ24

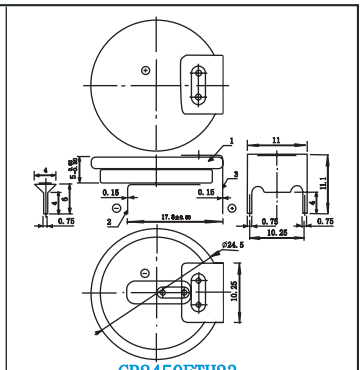
CR2450FTH23

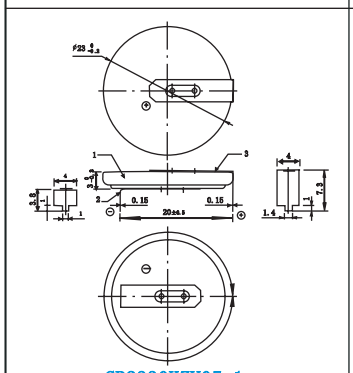
CR2330KZH05-1

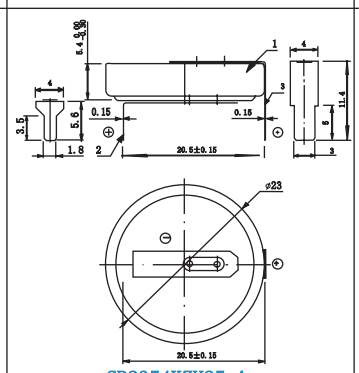
CR2354KZH25-A

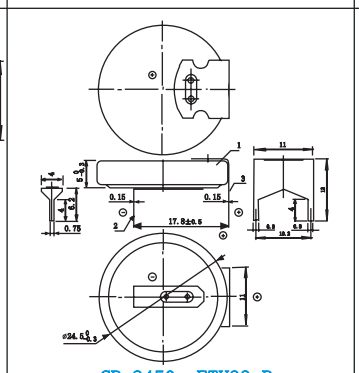
CR 2450 FTH33-B

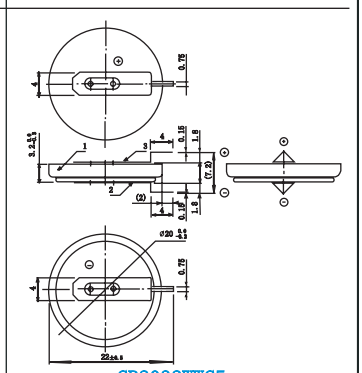
CR2032WWC5

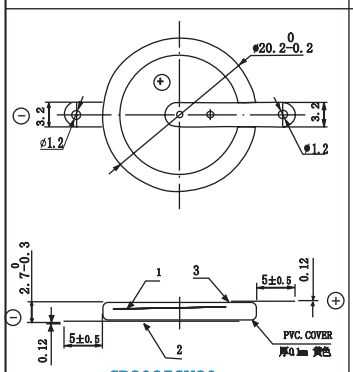
CR2025GV20-a

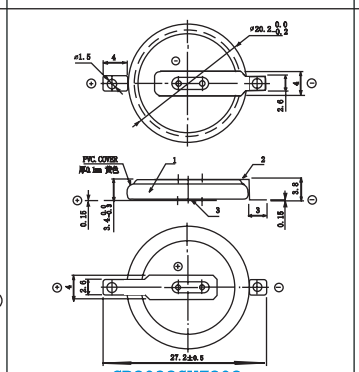
CR2032GVZ202

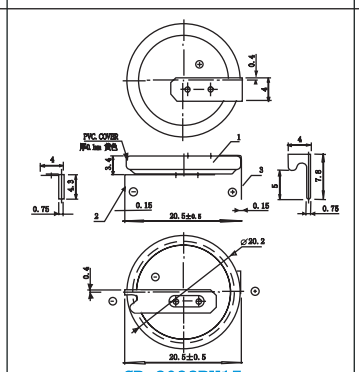
CR 2032PH15

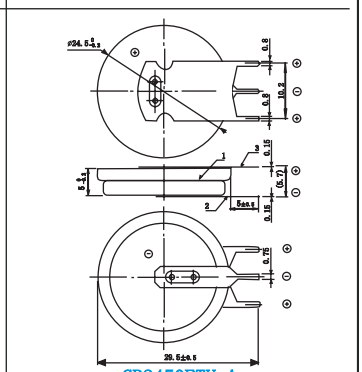
CR2450FTV-A

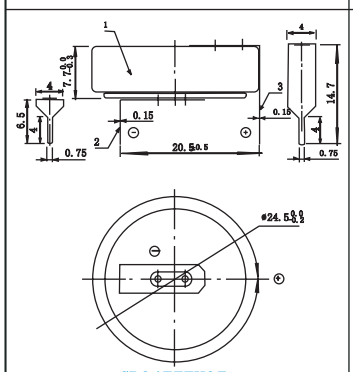
CR2477TH35

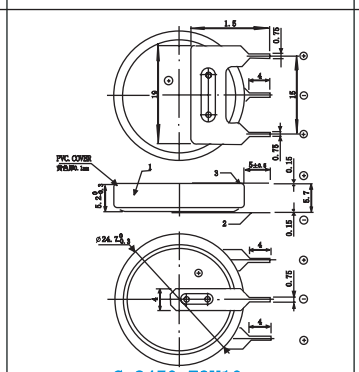
Cr2450 T3V10

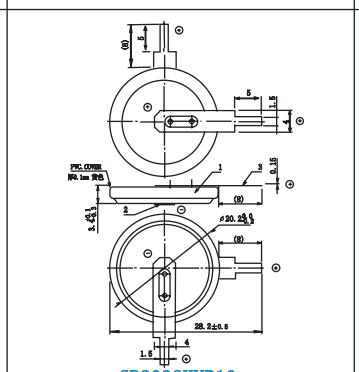
CR2032KVR10

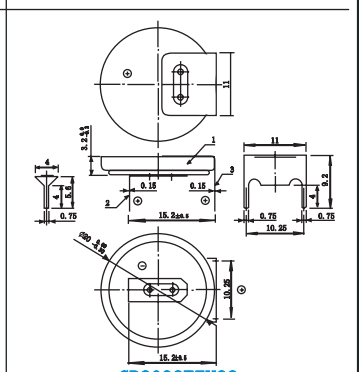
CR2032FTH22

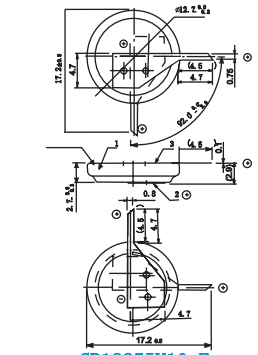 CR1225IV10-F	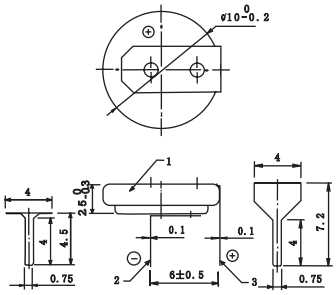 CR1025TH00-2	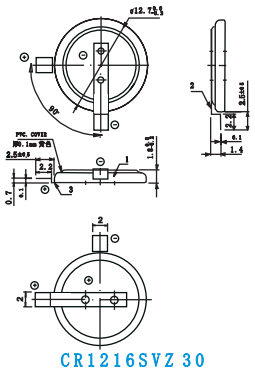 CR1216SVZ30	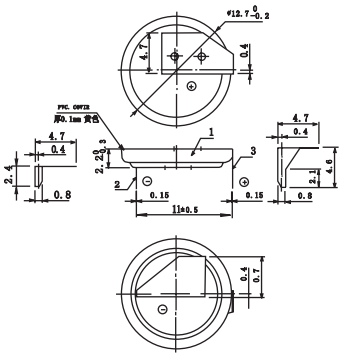 CR1220PH11-3
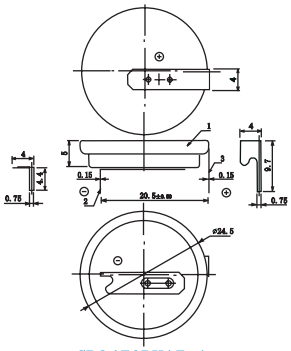 CR2450PH15-1	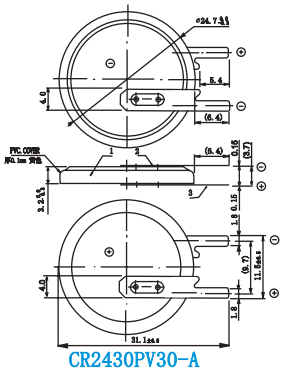 CR2430PV30-A	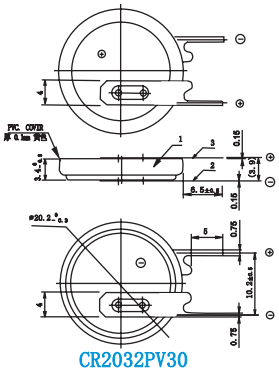 CR2032PV30	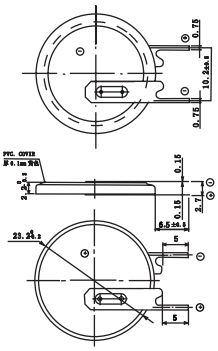 CR2320PV30-1
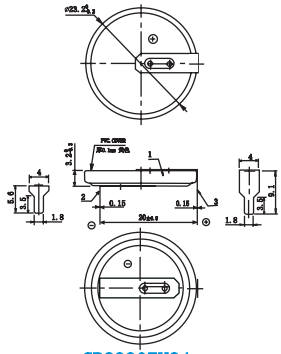 CR2330TH24	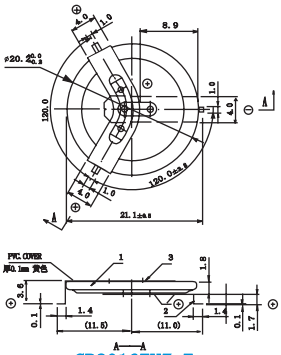 CR2016THZ-T	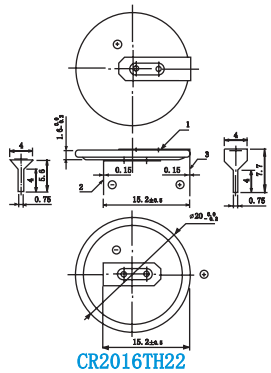 CR2016TH22	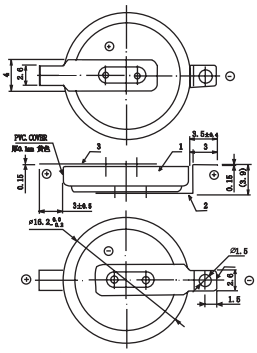 CR1632TVZ20-2

Specifications are subject to change without notice

GUANGZHOU MARKYN BATTERY CO., LTD
http://www.gmbattery.com
email: info@gmbattery.com